RECPRO®

4.4 CU.FT REFRIGERATOR
INSTRUCTION MANUAL

Model No.: RP-RFG-44-SS

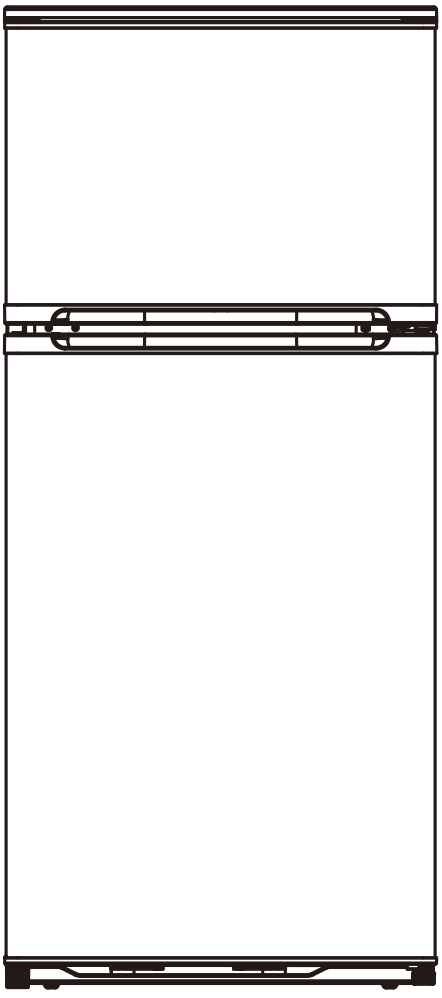

To ensure proper use of this appliance and your safety, please read the following instructions completely before operating this appliance.

TABLE OF CONTENTS

NAME OF THE PARTS…….……..... 3

IMPORTANT SAFETY INSTRUCTIONS…… 4-6

ELECTRICAL COMMECTION ……..... 6

OPERATION - TEMPERATURE REGULATION …..……... 7

CARE & MAINTENANCE …....…..……..……..... 8

INSTALLATION…...…..……...……...……...……... 9

TROUBLESHOOTING GUIDE…….…….……..... 10

Usage note
Do not remove the back panel during installation.

1. In order for normal use, the connection must be reliable. Besides the power source proper connection, the wire of the unit and outer wire must meet the following requirement:

Wire size	The max length (Feet)
14 AWG	3.2 Feet
13 AWG	8 Feet
12 AWG	13 Feet
10 AWG	20 Feet
8 AWG	33 Feet
6 AWG	50 Feet
Remarks:	14 AWG wire is not recommended. 13 AWG wire or Larger is recommended.
	This DC unit is not equipped with a power source. Please purchase a power source from an authorized dealer.

2. When using an adaptor or converter AC to DC, No DC power supply is recommended. The operation of the DC refrigerator is also dependent on a good, clean ground connections.
3. It is recommended that only authorized or qualified professionals perform repair services on unit.

Wire connection diagram

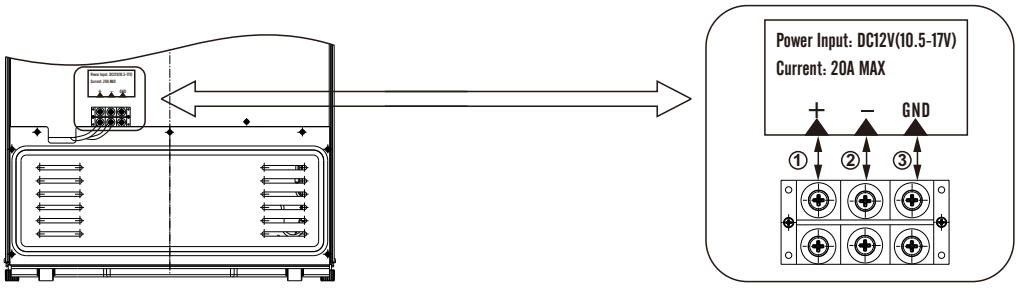

1. Connect ① terminal with Positive pole of 12V DC.
2. Connect ② terminal with Negative pole of 12V DC.
3. If the unit is installed in an RV, The ③ GND terminal should be connected to a metal portion of the RV.

NAME OF THE PARTS

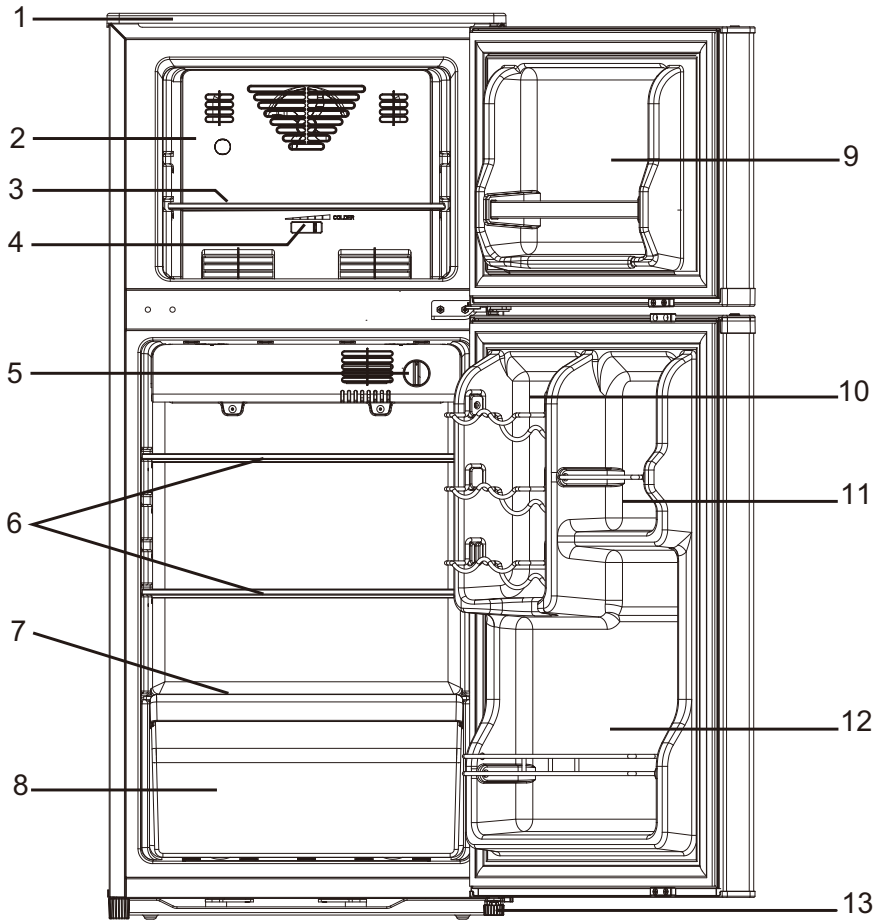

1.Cabinet Tabletop
2.Freezer Section
3.Freezer Shelf
4.Freezer Temperature Control
5.Refrigerator Temperature Control
6.Refrigerator Shelves
7.Crisper cover
8.Crisper
9.Freezer Door with Bin
10.Can Holder Bin
11.Refrigerator Door Bin
12.Refrigerator Bottle Bin
13.Leveling Leg

Important Safety Instructions

WARNING **To reduce the risk offfire, electrical shock, or injury follow these basic precautions when using your refrigerator.**

1) **WARNING**----Keep ventilation openings, in the appliance enclosure or in the built-in structure, clear of obstruction.
2) **WARNING**----Do not use mechanical devices or other means to accelerate the defrosting process, other than those recommended by the manufacturer.
3) **WARNING**----Do not damage the refrigerant circuit to increase the risk of a leak when handle, move, clean and use of product.
4) **WARNING**----Do not use electrical appliances inside the food storage compartments of the appliances, unless they are of the type recommended by the manufacturer.
5) **WARNING**----DANGER: Never allow children to play with, operate, or crawl inside the product. Risk of child entrapment. Before you throw away your old product:

- Take off the doors
- Leave the shelves in place so that children may not easily climb inside.

6) The appliance has to be unplugged before carrying out user maintenance on the appliance.
7) This appliance is not intended for use by persons (including children) with reduced physical, sensory or mental capabilities, or lack of experience and knowledge, unless they have been given supervision or instruction concerning use of the appliance by a person responsible for their safety. Children should be supervised to ensure that they do not play with the appliance. Cleaning and maintenance should not be made by children without supervision.
8) If the SUPPLY CORD is damaged, it must be replaced by the manufacturer, its service agent or similar qualified persons in order to avoid a hazard.
9) Please abandon the product according to local regulations as the unit contains flam mable blowing gas and refrigerant.
10) Follow local regulations regarding disposal of the appliance due to flammable refrigerant and blowing gas. All refrigeration products contain refrigerants, which under the guidelines of federal law must be removed before disposal. It is the consumer's responsibility to comply with federal and local regulations when disposing of this product.
11) This appliance is intended to be used in recreational vehicle or off-grid applications.
12) Do not store or use gasoline or any inflammable liquors and liquids inside or in the vicinity of product.
13) Do not use extension cords or ungrounded (two prong) adapters with this appliance. If the power cord is too short, have a qualified electrician install an outlet near the appliance. Use of an extension can negatively affect the performance of this appliance.

- The refrigerant and insulation blowing gas are flammable. When disposing of the appliance, do so only at an authorized waste disposal centre. Do not expose to flame.
- Cleaning and user maintenance shall not be made by children without supervision.

Refrigerant
The refrigerant isobutene (R600a) is contained within the refrigerant circuit of the appliance, a natural gas with a high level of environmental compatibility, which is nevertheless flammable. During transportation and installation of the appliance, ensure that none of the components of the refrigerant circuit becomes damaged.

Warning;Risk of fire/flammable materials

If the refrigerant circuits become damaged:
- Avoid open flames and sources of ignition.
- Thoroughly ventilate the room in which the appliance is situated.

BEFORE PUTTING INTO USE

- Before connecting the appliance to the power supply, let it stand for about 2 hours, which will reduce a possibility of malfunctions in the cooling system due to transport handling.
- Clean the appliance, and be thorough, especially in the interior.
- In case the interior accessories are not correctly placed, rearrange them as described in chapter “NAME OF THE PARTS”.

Instructions for Use
These instructions for use are intended for the user. They describe the appliance and its correct and safe use. They were prepared for various types/models of fridges therefore you may find in it description of some functions and accessories that your appliance does not have.

TIPS FOR ENERGY SAVING

- Try not to open the door too often, especially when the weather is wet and hot. Once you open the door, mind to close it as soon as possible.
- Every now and then check if the appliance is sufficiently ventilated (adequate air circulation around the appliance).
- Set thermostat from higher to lower settings as soon as possible (depends on how loaded the appliance is ambient temperature etc).
- Before loading the appliance with packages of fresh foods, make sure they are cooled to ambient temperature.

IMPORTANT

- **DANGER:** Risk of child entrapment. Before you throw away your old fridge: Take off the doors.
  Leave the shelves in place so that children may not easily climb inside.
- The appliance must be correctly connected to the power supply.
- Do not use an extension cords or ungrounded (two prong) adapters.
- Do not touch the cooled surfaces while the appliance operates, especially not with wet hands, because the skin may stick to the cold surfaces.
- If the food has strange smell or color, throw it away, because it is very likely that it is spoiled and therefore dangerous to eat.
- Disconnect the appliance from the power supply before repairing it (only a qualified technician should repair it), before cleaning.
- The rating plate is inside the appliance or outside on the rear wall.

Electrical Connection

WARNING **Improper use of the grounded plug can result in the risk of electrical shock. If the power cord is damaged, have it replaced by an authorized service center**

This refrigerator should be properly grounded for your safety.

This refrigerator requires a standard 10.5-17VDC , electricity ≥15A.
Direct connection with AC power source is forbidden.

Do not connect this unit to an AC power soure.

To prevent accidental injury, the electrical cord should be secured behind the refrigerator, and not be left exposed or dangling.

Installing the Top Mounting Bracket

- Top Mounting Bracket
- Mounting Screw.

① Top Mounting Bracket ② Mounting Screw

1.Secure the top mounting bracket to the refrigerator using the two M5 x 20 mounting screws provided.
2.Place the refrigerator completely into the enclosure.

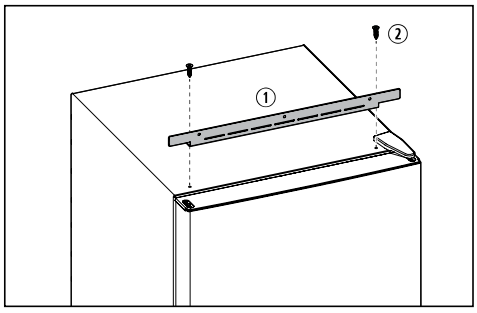

Installing the Bottom Mounting Bracket

① Bottom Mounting Bracket ② Mounting Screw

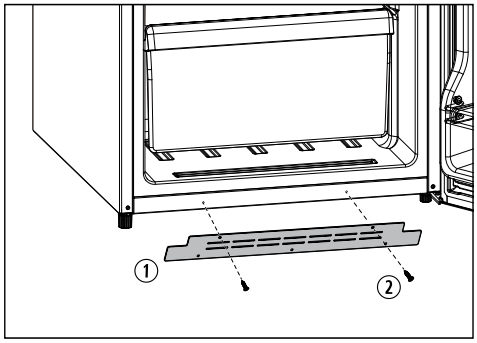

Operation - Temperature regulation

Temperature Control

- To control the internal temperature, adjust the control dials according to the ambient temperature or purpose of use.
- The first time you turn the unit on, set the temperature control to “MAX” in refrigerator section and “MID” in freezer section.
- The range of the temperature control is from position “OFF” the warmest to “MAX” the coldest in refrigerator section and from position “MIN” the warmest to “MAX” the coldest in the freezer section. After 24 to 48 hours, adjust the temperature control to the setting that best suits your needs.

FREEZER

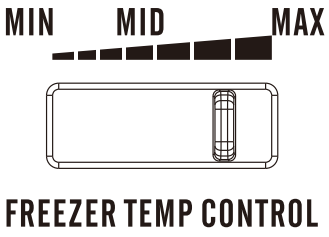

REFRIGERATOR

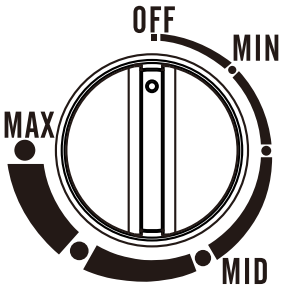

NOTE
If the unit is unplugged or loses power; you must wait 3 to 5 minutes before restarting the unit. If you attempt to restart before this time delay, the refrigerator may not start.

NOTE
Do not store canned foods or food stored in glass containers in the freezer compartment.

The Freezer Compartment
This compartment is designed for the long-term storage of frozen food. The storage life of frozen foods varies and the recommended storage time should not be exceeded. Place frozen food into the freezer as quickly as possible after purchase. If there are instructions on the packet, carefully follow these instructions regarding storage times.

Replacing the Interior Light

LED lamp can not be replaced by user. It must be replaced by the manufacturer, service agent or similarly qualified person.

Care and Maintenance

Cleaning Your Refrigerator

- Clean interior and parts with a cloth soaked in lukewarm water and baking soda solution. A solution of 2 tablespoons baking soda to a quart of water will clean and neutralize odors. Rinse and wipe dry.
- Be sure to keep the door gasket (seal) clean to keep the unit running efficiently.
- The outside of the refrigerator should be cleaned with a warm damp cloth and mild detergent. Do not use harsh or abrasive cleaners.
- Never clean refrigerator parts with flammable fluids. The fumes can create a fire hazard.

Vacation Time

- For long vacations, remove all food.
- Clean the interior and leave doors open to avoid possible odor or mold formation.
- Use extreme caution in the case of children. The unit should not be accessible to child's play.

Moving Your Refrigerator

- Disconnect the power source.
- Remove all the food and securely tape down all loose items such as shelves, drawers, and doors.
- Be sure the refrigerator stays in the upright position during transportation.

Energy Saving Tips

- The refrigerator should be located in the coolest area of the room, away from heat producing appliances or heating ducts, and out of the direct sunlight.
- Let hot foods cool to room temperature before placing in the refrigerator.
- Be sure to wrap foods properly, and wipe containers dry before placing them in the refrigerator. This cuts down on frost build-up inside the refrigerator.
- Organize and label food to reduce door openings and extended searches

Installation

Install the refrigerator in a convenient location away from extreme heat and cold. Allow sufficient clearance between the refrigerator and side wall so the door(s) will open without obstruction.
Select a space with strong level floor.
Allow 1 inches of space between the refrigerator's side and the wall.
The appliance must be correctly connected to the power supply.

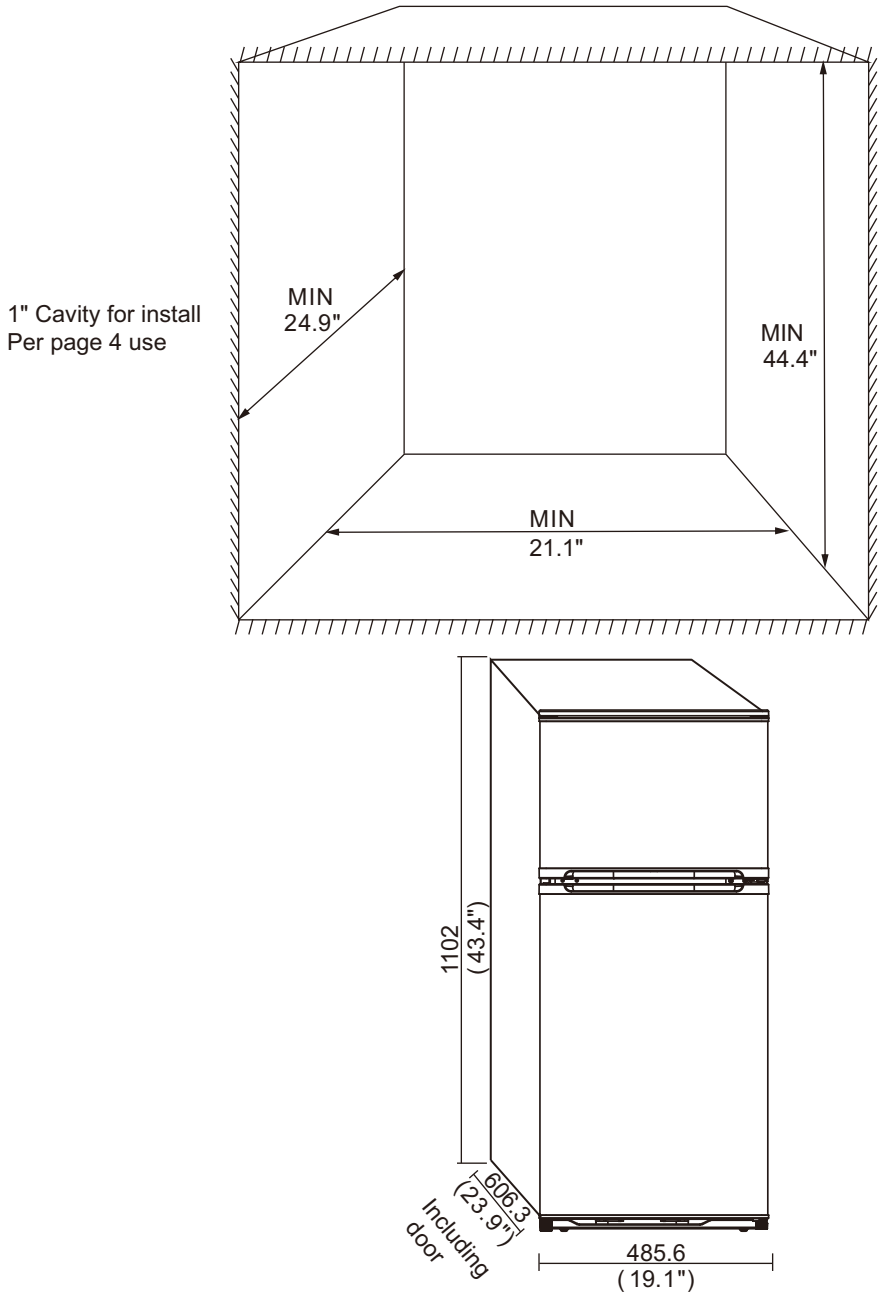

Note: The door should protrude at least 1" beyond the surrounding cabinets.

Troubleshooting Guide

You can solve many common refrigerator problems easily, saving you the cost of a possible service call. Try the suggestions below to see if you can solve the problem before calling for service.

Problem	***Possible Causes***
Refrigerator does not operate	• Refrigerator is unplugged. • The circuit breaker is tripped/ fuse blown.
Compressor turns on and off	• The room temperature is warmer than normal • Door is left open or is frequently opened. • The refrigerator does not have the correct clearances. • The refrigerator has recently been disconnected for a period of time.
Refrigerator compartments are too warm	• Temperature control is not set correctly. • Door is left open or is frequently opened. • The door gasket does not seal properly. • A large amount of warm or hot food was stored recently. Wait for the refrigerator to reach its selected temperature. • The refrigerator has recently been disconnected for a period of time.
Vibrating or rattling (slight vibration is normal)	• Leveling legs need adjusting • Refrigerator is placed on an uneven or weak surface. • The refrigerator is touching the wall. Re-level the refrigerator and move it away from the wall.
Temperature of external refrigerator surface is warm	• The exterior refrigerator walls can be as much as 30°F warmer than room temperature. • This is normal while the compressor works to transfer heat from inside the refrigerator cabinet.
Moisture collects inside the refrigerator	• Door is left open or is frequently opened.
Moisture forms on outside of refrigerator	• Is normal in hot and humid weather. Air carries moisture into the refrigerator when doors are opened.
Bubbling or gurgling sounds (like boiling water)	• This is the normal sound of refrigerant (used to cool refrigerator) circulating throughout the system.
Popping or cracking sounds when compressor comes on	• This is normal. Metal parts undergo expansion and contraction, like hot water pipes. The sound will level off or disappear as refrigerator runs.
The door will not close properly	• The refrigerator is not on a level surface. • The gasket is dirty. • The storage basket is out of position.